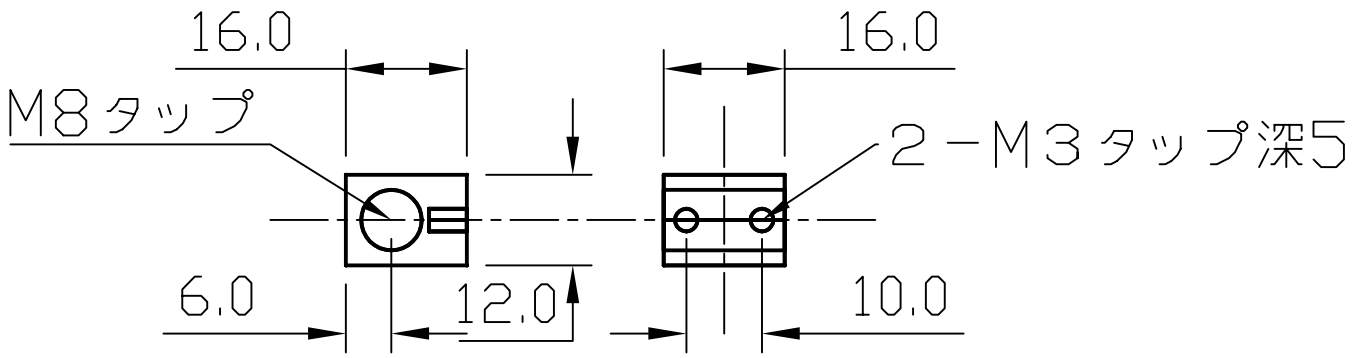

REF NO	PART NO.	REQD	MATERIAL DESCRIPLTION	REMARKS
		2	A5052	

REQD	NEXT ASSEMBLY	FINAL ASSEMBLY	HEAT TREATMENT / FINJSH
			黒アルマイト

DATE		3RD ANGLE PROJ.	TITLE
2025－ 8 －22	A4	DIM in mm	ピコ7

DSG	CHK	APP	SCALE
			1/1

Kyoto Univ.
Dept. of Astromony

DWG NO. GADES_pico7

REV