改定	改　訂　内　容	日　付	担当

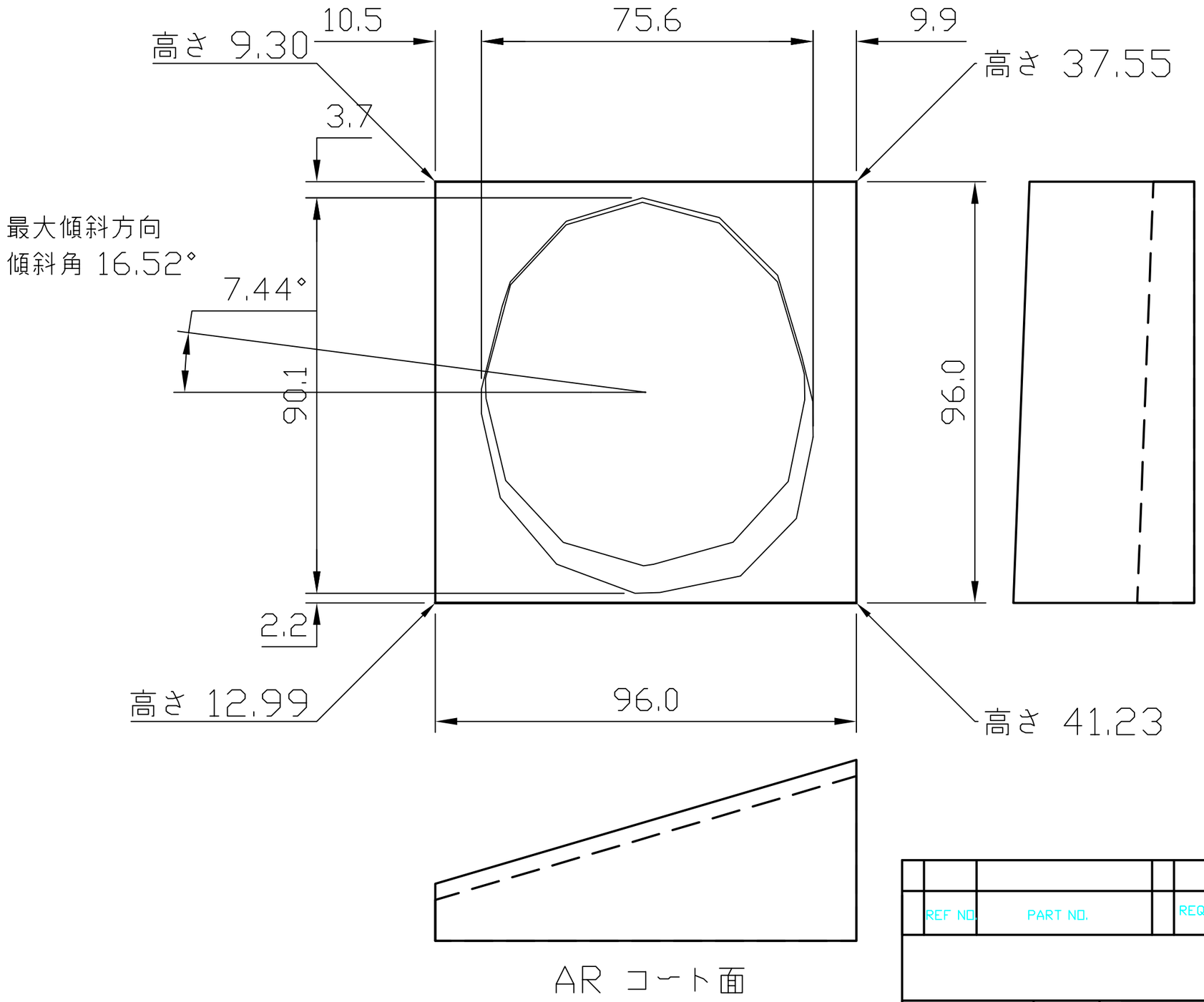

				ZnSe	
REF NO.	PART NO.		REQD	MATERIAL / DESCRIPTION	REMARKS
				HEAT TREATMENT / FINJSH	

DATE - -	A3	3RD ANGLE PROJ. DIM in mm	TITLE	プリズム1
DSG	CHK	APP	SCALE —	
Kyoto Univ. Dept. of Astronomy			DWG NO.	□A□spec5-prism1
				REV

REQD	NEXT ASSEMBLY	FINAL ASSEMBLY