改定	改　訂　内　容	日　付	担当

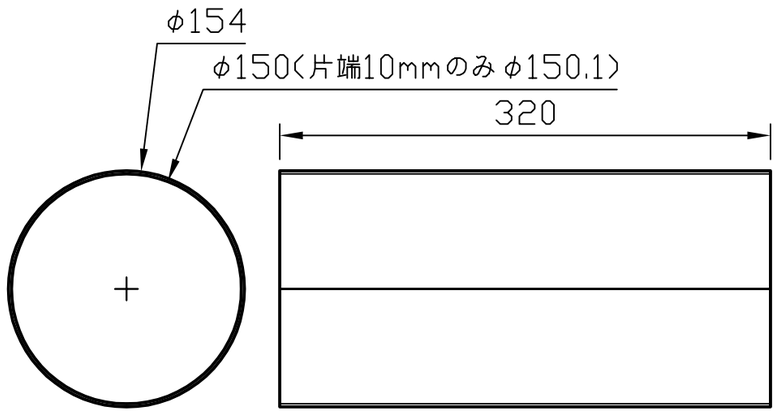

REF NO.	PART NO.	REQD	MATERIAL / DESCRIPLTION	REMARKS
		1	SUS430	

HEAT TREATMENT / FINJSH

DATE		3RD ANGLE PROJ.	TITLE
2024－9－12	A3	DIM in mm	Mチューブ3

DSG	CHK	APP	SCALE
			1/4

Kyoto Univ.
Dept. of Astronomy

DWG NO. cahk_mtube3

REV

REQD	NEXT ASSEMBLY	FINAL ASSEMBLY