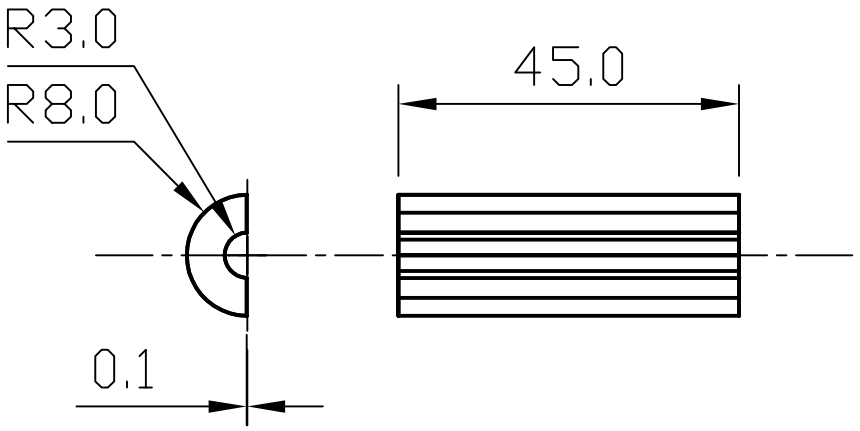

REF NO	PART NO.	REQD	MATERIAL DESCRIPLTION	REMARKS
		2	A5052	

REQD	NEXT ASSEMBLY	FINAL ASSEMBLY

HEAT TREATMENT / FINJSH: 黒アルマイト

DATE: 2025－ 8 －22

A4

3RD ANGLE PROJ.
DIM in mm

TITLE: ピコ5

DSG	CHK	APP	SCALE
			1/1

Kyoto Univ.
Dept. of Astromony

DWG NO.: GADES_pico5

REV